Varde Bornholm

Spare parts overview

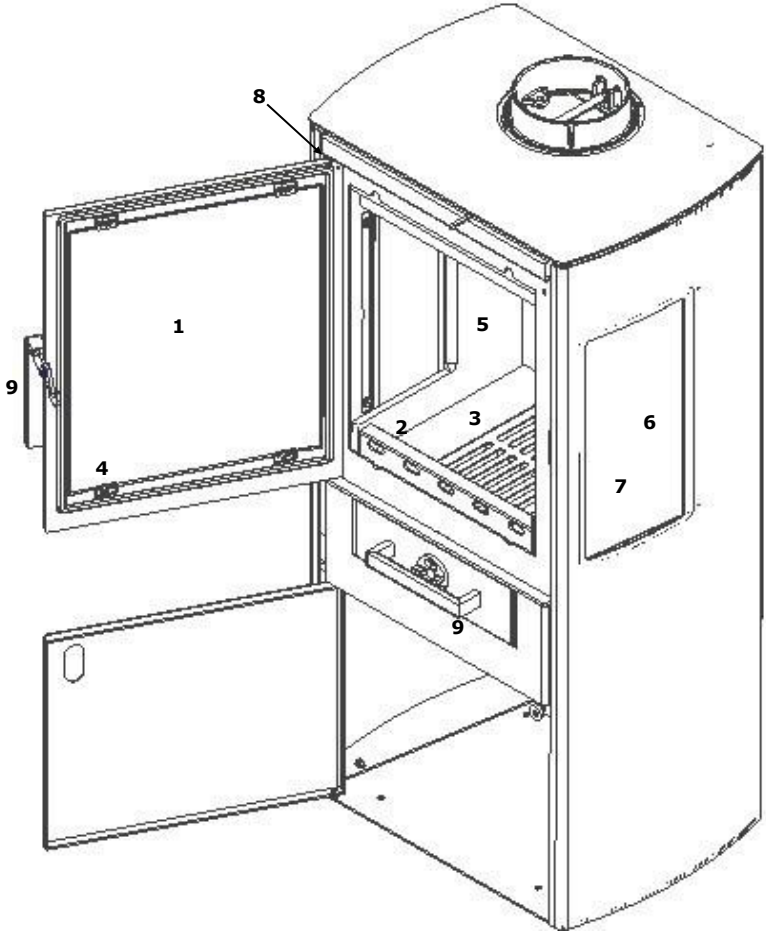

	Spare Part Name:	Part number:
1.	Glass pane for door	100272
2.	Solid fuel retainer	100366
3.	Cast iron bottom grate	100662
4.	Glass mounting clips kit	100876
5.	Vermiculite	100882
6.	Glass for side panel - inner	100883
7.	Glass for side panel - outer	100884
8.	Door springs	100895
9.	Handles - kit for door and ash tray	100974

Extra:

Top cover	100701